AUTOMOTIVE CONNECTOR STRATEGIES AND SOLUTIONS FOR SPACE SAVING

A TE Connectivity White Paper

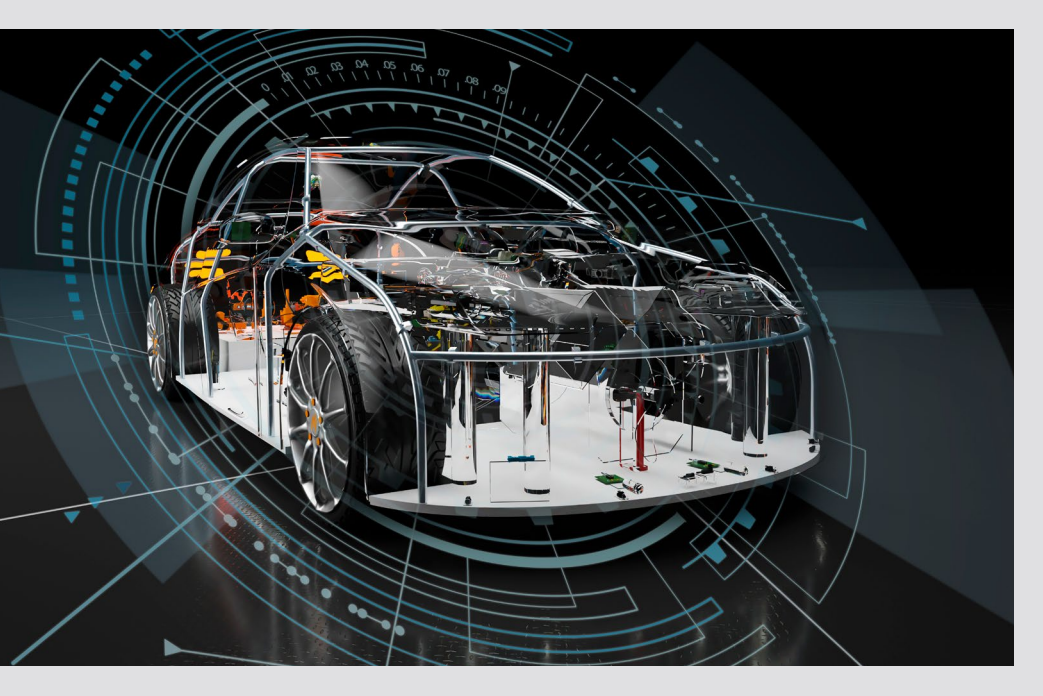

CONTENTS

ABSTRACT

Automotive manufacturers have been building more electronic content into vehicles with powertrain electrification and increasingly sophisticated driver assist systems accelerating that trend. As a result, many sensor-driven control units with multiple printed circuit boards now have kilometers of new cabling and an exponential number of new connections all of which compete for space in dense car architectures. At the same time there is a growing trend towards light-weight components for greater fuel-efficiency and more environmentally friendly cars.

Manufacturers therefore need to find smarter electronic solutions that save space and reduce weight. Industry manufacturers are widely adopting miniaturized connectors inside vehicles, as wire sizes and packaging space within control units have been reduced. In some cases, so-called "black-box" components have included non-automotive miniaturized connectors. Their lack of robustness for automotive harsh environments have led to quality problems in a few modules and in certain cases component failures.

Automotive OEMs need to ensure that the sub-system modules they source are fitted with connectors that are truly automotive-grade – designed to comply with specifications and validation requirements such as LV214 (Europe) and USCAR2 (USA).

In this paper, we examine how manufacturers can achieve strategic space saving goals by using miniaturized connectors that provide true automotive-grade robustness. Specifically, we examine two of TE Connectivity's miniaturized interconnection platforms for automotive applications; NanoMQS and MCON 0.50 interconnection systems – examining how they meet industry specifications, provide key technical advantages, and enable space saving of up to 50 percent. We also consider other factors contributing to the robustness of miniaturized components, such as small-wire crimp quality, and discuss how to address the increased risk of metallic whisker growth on high-density PCB pin connections.

1 | NEW ECUS MUST MEET MORE STRINGENT AUTOMOTIVE REQUIREMENTS

Connected cars are transforming before our eyes. The industry is developing rapidly, with powertrain electrification and the development of advanced driver assistance systems (ADAS) that provide greater comfort and safety, and integrated vehicle-to-everything (V2X) connectivity that becomes ever more sophisticated and powerful. All of these new subsystems are enabled with hardware, sensors, and software. However, they must be physically integrated into the vehicle through a series of ECUs networked together or via new fully redundant computing system approaches.

While autonomous vehicle functions are growing at a rapid pace, car architectures are space-constrained environments. Manufacturers are asking their partners for lighter and miniaturized components that free-up much-needed space for wire connections within an increasing number of electronic control units (ECUs).

A typical luxury car contains up to 80 ECUs, each with increasing levels of complexity. Each ECU contains at least one printed circuit board (PCB) and a single header mounted on a PCB.

An ECU can accommodate up to several hundred wire connections which in turn are contained within complex wire harness systems. In addition, existing applications are becoming more complex, introducing more functions and ADAS in vehicles. As an example, new LED headlamp units can contain up to 60 circuits, 15 connectors, and 120 terminals.

Automotive manufacturers experience technical challenges connecting all these ECUs or modules to the vehicle wiring system. They must ensure that they stay connected and functional, withstanding adverse conditions such as vibrations, fluid ingress, and extreme temperatures in the vehicle harness or different sub-system modules that could interrupt safe continuous operation.

2 | HOW MINIATURIZED INTERCONNECTION PLATFORMS ENABLE INNOVATION

These industry and technology trends necessitate next-generation miniaturized interconnection platforms to save space, preserve fuel efficiency, and ensure performance. To ensure automotive-grade robustness, all connectors and components must meet global OEM specifications such as LV214 and USCAR2. Fortunately, such solutions are already available on the market.

This paper examines TE Connectivity's (TE) solutions that enable space saving within vehicle electrical wiring architectures, highlighting NanoMQS terminals and connectors, the smaller variant of the highly successful MQS family, and MCON 0.50 interconnectors, its 'clean body' counterpart. In addition, the paper examines the specific crimping challenges and requirements for smaller wires as well as the challenge of metallic whisker growth on high-density PCB pin connections.

3 | INTRODUCING TE SOLUTIONS FOR MINIATURIZED AUTOMOTIVE CONNECTIVITY

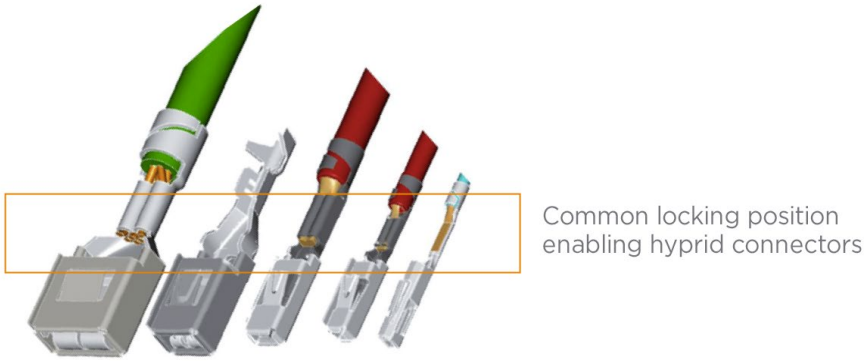

Figure 1. MQS Product Family

TE's original MQS interconnection system was launched more than 20 years ago. It has become one of the most successful automotive interconnection solutions in the industry, due to its 2.54 mm pitch for high-packaging density and highly robust automotive-grade design, featuring two locking levels. The system is used by nearly every European vehicle manufacturer and numerous others globally.

Over the years, the MQS platform has been expanded with the introduction of the Micro-power Quadlok (MpQ) and the power Quadlok (pQ) series to carry higher currents (Figure 1).

4 | AN OVERVIEW OF NanoMQS TERMINALS AND CONNECTORS: DESIGN AND TECHNICAL SPECIFICATIONS

Based on the MQS terminals design, NanoMQS interconnection system was launched to address manufacturers' need to miniaturize electronic components such as ECUs and PCBs. The NanoMQS interconnection system incorporates miniaturized terminals (contacts), connectors, and headers to address dense vehicle electronics.

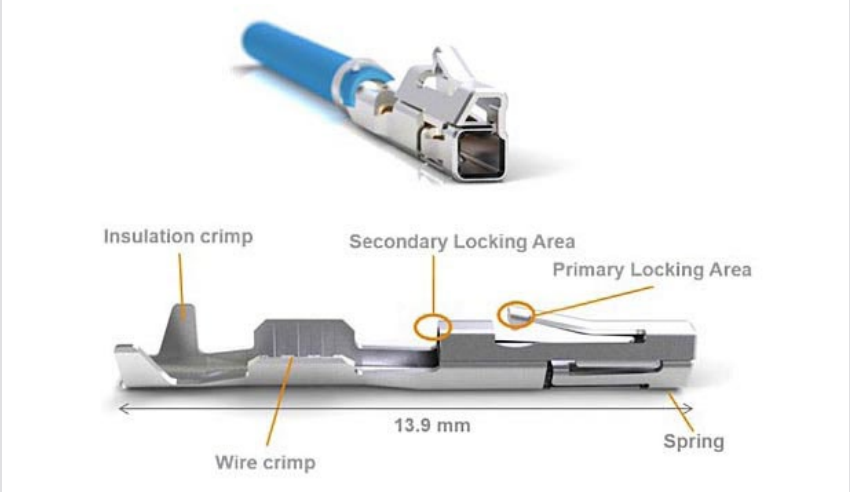

Figure 2. NanoMQS terminal

This design reduces the PCB footprint by approximately 50 percent while offering up to three amps of nominal current capacity. In addition, the NanoMQS interconnection system can accommodate wire-cross sections as small as 0.13 mm^2, allowing manufacturers to reduce wire harness weight if needed.

The sealed version of NanoMQS system also offers an exceptional level of vibration resistance of up to 400 g sinus..

5 | AUTOMOTIVE-GRADE MINIATURIZED TERMINALS PROVIDE RELIABLE ONGOING PERFORMANCE

At the core of the NanoMQS interconnection platform is a single-piece crimp terminal (Figure 2).

The standard version of the receptacle contact is made from tin-plated copper. It is available in wire-cross sections of 0.13 mm^2 to 0.17 mm^2 and 0.22 mm^2 to 0.35 mm^2. The receptacle contacts are designed for contact blades measuring 0.5 by 0.4 millimeters.

- The version with tin-plated terminals is approved for ambient temperatures between -40° C and up to 130° C.
- A version with silver-plated terminals can be used in conditions of up to 170° C and is therefore suitable for applications within the engine bay area.
- A version with gold-plated terminals increases the number of mating cycles up to 100 times. It also significantly reduces chances of metal corrosion, increasing contact lifespan and usability for safety applications such as airbag systems.

NanoMQS terminals and connectors have a nominal current carrying capacity of up to three amps. However, it can also support short peaks of up to five times the nominal limit. When mated, the receptacle contact establishes two electrical points of contact to the corresponding blade via a robust L-shaped spring that exerts a high normal force.

The NanoMQS receptacle contacts feature a closed-box design contact chamber which works with comparatively large lead-in chamfers on the housing to ensure a smooth guided insertion. This prevents the blade colliding with the receptacle contact during mating ("stubbing"), which could deform and damage the contact lance due to incorrect insertion.

On top of the terminal is a locking lance, which audibly and tangibly latches onto the plastic housing once the terminal is fully inserted. The locking lance provides the primary locking mechanism for the two-level contact retention system. The locking hole is visible via a cutout, enabling manufacturers to confirm that lances are correctly inserted (Figure 3 and Figure 3A). The maximum insertion force for the primary

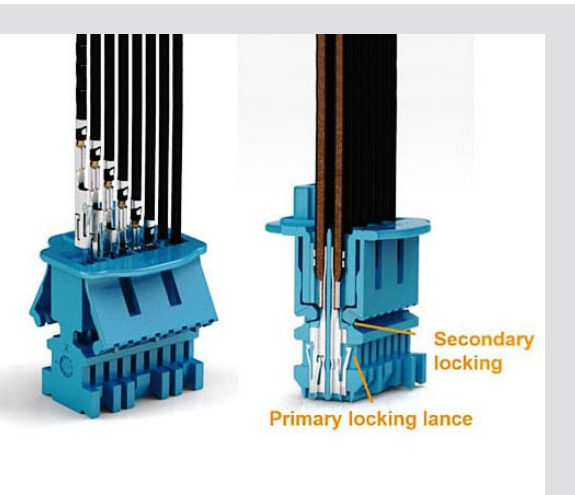

Figure 3: NanoMQS locking mechanism

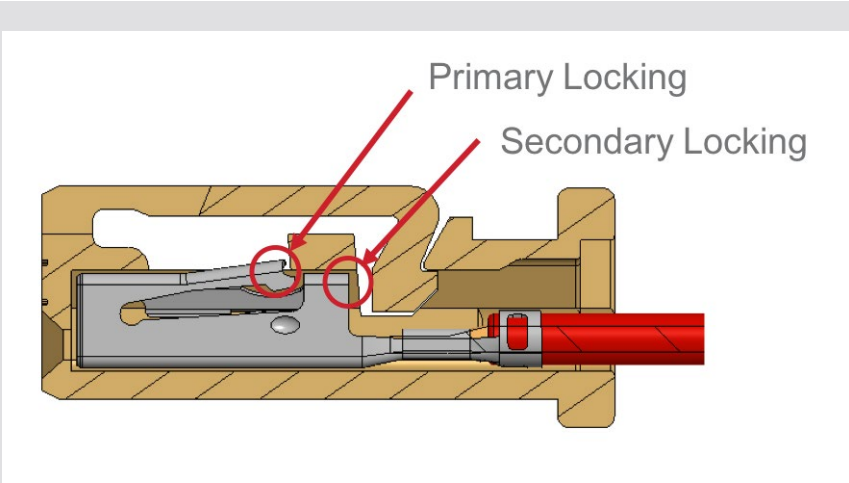

Figure 3A: Highlighting the NanoMQS locking mechanism

locking device is 5 N, enabling a minimum retention force of 25 N. The second independent secondary locking device, which latches onto an undercut on the housing, enables a retention force greater than 50 N.

6 | NanoMQS POLARIZED LOCKING MECHANISM PREVENTS INCORRECT INSERTION

Despite its small dimensions, the terminal features contact cavities that provide a polarized cross-section. This design means that the risk of incorrect inserting is effectively eliminated, and the NanoMQS system can be safely and conveniently handled. Like the MQS platform, the NanoMQS platform is designed for 20 mating cycles. Customers can select whether terminals are placed into plastic connector housings via manual assembly or fully automated insertion.

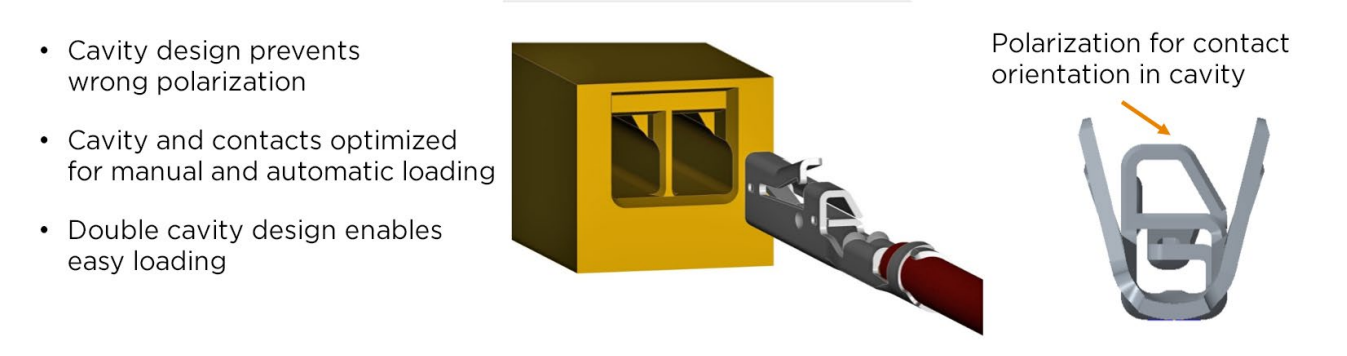

Figure 4: Polarization of NanoMQS contact

7 | TWO OPTIONS FOR HIGH-GRADE THERMOPLASTIC CONNECTOR HOUSINGS AND HEADERS

NanoMQS housing components (headers and connectors) are made from high-grade thermoplastic. There are two versions, Top Latch (TL) and Side Latch (SL), both of which are available in a perpendicular or parallel orientation to the PCB. A notable difference between the two versions is the position of the locking device of TL version, which is located centrally on top of the housing (Figure 4).

NanoMQS HOUSING – THE TOP LATCH (TL) VERSION

The TL version's central locking device position makes it easier to mount connectors side-by-side, which increases packaging flexibility. For example, during the development of a new model, three generic connectors can be mounted side-by-side initially to establish a high-position interconnection of up to 96 pins. Manufacturers can then switch to a single customer-specific part without changing technology.

On the TL version, housing rigidity is reinforced by ribs for two to 32 positions. The primary role of the ribs is to increase locking options in versions with 20 positions and more.

NanoMQS HOUSING – THE SIDE LATCH (SL) VERSION

On the slightly more compact SL version, the locking device is located at the side of the housing (Figure 5). With the SL version, the device

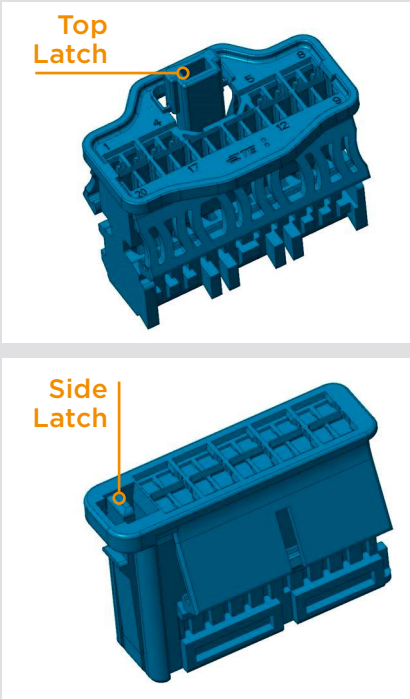

Figure 5. NanoMQS housings: Top Latch and Side Latch version

can be locked at up to 20 positions without the need for reinforcement ribs. In addition, the plastic locking and latching profiles have compact geometries. For example, the overlap between the connector and header fronts has a wedge shape that ensure a smooth guiding-in of the two halves during connector mating. When fully mated, the overlap results in a strong, positive connection formed by two wedge shapes securing each other.

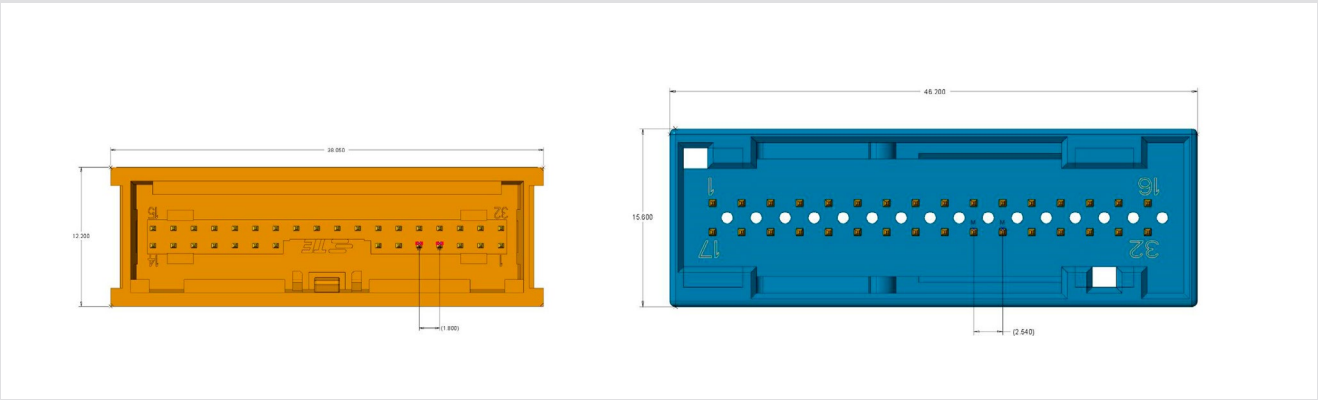

Figure 6: NanoMQS header (left) compared to a MQS header.

8 | HOW NanoMQS TERMINALS DELIVER UP TO 50% SPACE REDUCTION

NanoMQS series terminals are designed for a nominal pitch, corresponding to the distance between the pins connecting with the PCB of 1.8 millimeters. Therefore, the same number of positions on a NanoMQS header requires only approximately half the space on a PCB compared to an MQS header needs (Figure 6).

As depicted in the figure, the header footprint of the MQS platform is reduced from 840 mm^2 to 411 mm^2 with NanoMQS system. Clearly, high-position interconnections will be much in demand with next-generation car architectures with significant packaging density. In an engine ECU NanoMQS terminals could save 60 percent of the ECU's spatial footprint.

Current NanoMQS terminal versions can accommodate up to 320 positions. This makes the NanoMQS platform ideally suited for hybrid connectors, as every contact of the MQS family can be integrated into a grid as a multiple of the next size up (Figure 7). This capability is enabled by the fact that the secondary locking device is on the same level on all housings.

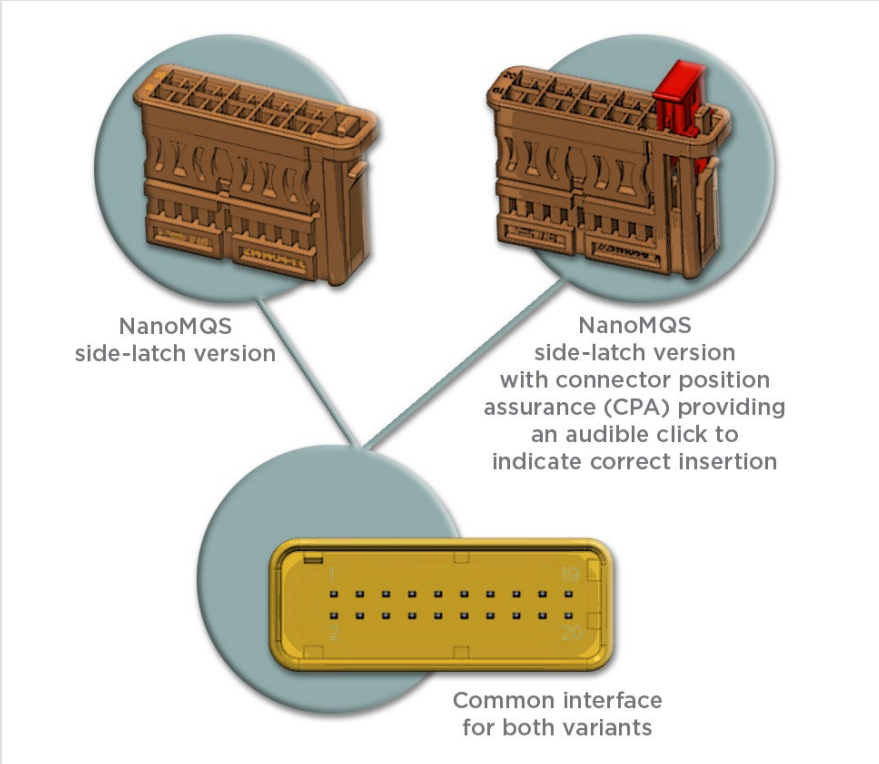

Figure 7: NanoMQS header (left) compared to a MQS header.

9 | HOW THE NanoMQS PLATFORM SUPPORTS UP TO LEVEL FOUR HIGH VIBRATION RESISTANCE

Electric connections within vehicles must sustain vibration and shock resistance. Miniaturized components such as the NanoMQS interconnection system are often deployed in sub-system modules, known as "black boxes," in severely space-constrained spaces that are hard to access.

In Europe, major German vehicle manufacturers define vibration test levels in specifications such as LV 214. The standard unsealed versions of the NanoMQS series meet the LV214 level 4 (Ag-plated contacts) at around 181 m/s2 effective acceleration.

Figure 8. NanoMQS system, sealed version housing

This is notable because the NanoMQS system meets the requirement for a sealed connector. With the high-contact normal force of the NanoMQS system, connectors incorporating an additional seal can achieve level three vibration for close-proximity installation and level four vibration in the case of direct engine mounting (Figure 8)..

Robust by design, NanoMQS terminals and connectors can also meet very high 400 g sinus vibration resistance requirements, as stipulated for injection valves or other direct engine mounted applications.

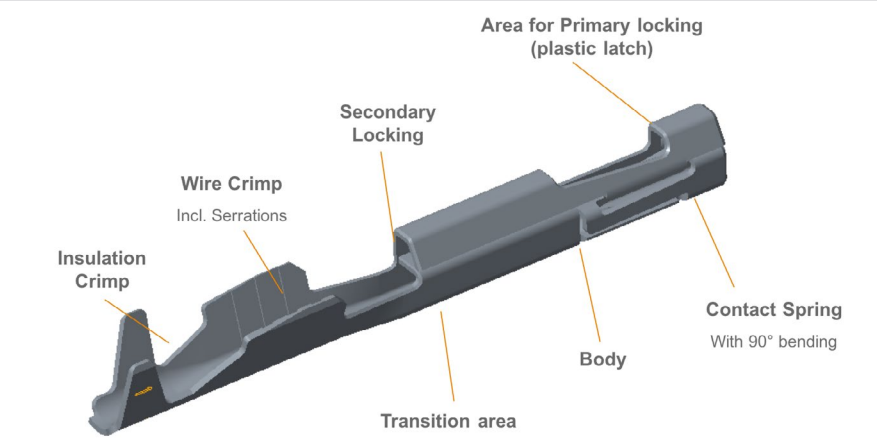

Figure 9. MCON 0.50 system "Clean-Body Design"

10 | INTRODUCING MCON 0.50 INTERCONNECTION SYSTEM FOR EXTREMELY HARSH AUTOMOTIVE ENVIRONMENTS

The MCON 0.50 interconnection system is part of TE's MCON interconnection product family, which has been designed for deployment in very harsh automotive environments. It is a sealed system that features specially engineered silicone seals. These seals prevent fluid and moisture ingress into areas of electrical contact, which is required for applications found in the engine bay area.

MCON 0.50 terminals and connectors meet LV214 level 3 requirements for close-proximity installations and level 4 requirements for direct engine mounting. It also achieves an IP9 level of water protection.

Unlike NanoMQS interconnection system and the rest of the MCON family, the MCON 0.50 terminal by design has no primary locking lance, offering what is known as a "clean-body approach" (Figure 9).

This means that there are no flanges that extend out from the connector to lock it into place inside the housing, creating a cleaner body profile. This design is intended to minimize any wear and tear on the interior of the connector housing, which might compromise the moisture seal. The sealed version provides the very highest level of water and moisture resistance. MCON 0.50 systems can be submerged in several meters of water and take 80 bars of force from an IPX steam jet.

Dimensions and performance of the NanoMQS and MCON 0.50 platforms

Dimensions		Performance	
Pin-to-pin pitch	1.8 mm	Current Capacity	3A (90° C)
Wire Size	0.13 mm to 0.35 mm^2	Maximum Temperature	170° C (Ag)
Blade Size	0.5 x 0.4 mm	Vibration Resistance	SG4 (Ag)
		LV214-Compliant	Yes
		Position Assurance	Primary and secondary locking

11 | THE ROLE OF TOOLING IN AUTOMATIC HANDLING

The challenge of miniaturizing automotive-grade components extends to the wire termination and crimping process. Application tooling plays a vital role in ensuring high-performance connectivity and true automotive vibration resistance with the termination of smaller wires.

WHY ARE SMALLER WIRES HARDER TO CRIMP?

Intrinsically, miniaturized terminals are constructed from thinner material, which means that they are easier to deform or mangle during the crimping process. It also means that the presence of flash, or crimp deformation in the form of protrusions, becomes more significant as it can form a larger percentage of the overall terminal profile. This is problematic because flash can hinder insertion into, or damage to, a connector housing, particularly its sealing components. Small-wire applications typically require smaller tooling gaps to avoid producing significant flash. Tooling gap refers to the flash escapement space between a crimper and anvil when the two are at crimp height. For reference, a tooling gap as small as 0.05 mm can produce significant flash for a terminal with a crimp width of 1.00 mm.

The smaller size also makes it much more challenging to accurately position the wire within the terminal during the crimping process. Small-gauge wires are less rigid which makes them susceptible to drooping or bending, hindering insertion into the terminal. Similarly, it is more difficult to align the terminal to the anvil within the crimp applicator tool.

Crimp asymmetry is another characteristic of lower-quality crimping that can cause reduced electrical and mechanical performance. Inaccurate placement of terminals over the anvil is a leading cause of asymmetry and flash. This inaccuracy can be caused by improper setup or by a substandard terminal feed mechanism. Typically, high-quality pneumatic feed applicators produce more accurate results than mechanical or lower-quality pneumatic feed applicators.

APPLICATION TOOLING FOR SMALL WIRES AND MINIATURIZED TERMINALS

TE applicators for small-wire crimping use highly accurate pneumatic or servo feed mechanisms. These mechanisms enable users to set the initial terminal alignment easily and maintain consistent alignment while the applicator is in use.

TE collaborates with partners early in the development stage to develop complete component and tooling solutions that meet unique application needs. TE pre-tests these component and tooling solutions against automotive standards so that end-users obtain a holistic and certified solution they can completely rely on.

Figure 10. TE's OCEAN 2.0 Applicator

HOW OCEAN APPLICATOR 2.0 IMPROVES SMALL-WIRE CRIMPING

The OCEAN Applicator 2.0 is the latest in TE's series of applicators, featuring several upgrades designed to improve small-wire crimping (smaller than 0.35 mm^2). General design advantages include an optimized anvil geometry, a pinned-base plate to prevent anvil misalignment, and a new black nitriding finish for significantly improved resistance to wear and tear (Figure 10).

TE has developed features to aid small-wire crimping, which include easier feed adjustments and strip guide lock improvements. In addition to the new optimized anvil geometry, the OCEAN Applicator 2.0 features a new System 3 terminal hold-down mechanism to ensure accurate and stable terminal positioning. It also provides a robust crimp height adjustment feature, as well as a locking mechanism.

Manufacturers can perform quality control and verification of the automated crimping process via standard crimp monitoring systems, which are also suitable for fine wires. In addition, the TE CrimpData App enables partners to conduct efficient wireless monitoring of the automated crimp processes, including monitoring of cycle numbers setting alarms to conduct maintenance and replace spare parts.

TE's manual crimp tools deliver exactly the same crimp connection quality as automated wire termination. In addition, the manual tool's good ergonomics enable it to be used within confined spaces.

12 | ANTI-WHISKER PRESS-FIT PIN PLATING

The trend towards miniaturization also increases the industry's need for solutions that prevent metallic whisker formation. The increasing amount of electronics in vehicles has led component manufacturers to use press-fit technology for printed circuit board (PCB) connectivity as a reliable alternative to solder-based solutions. Plating is applied to press-fit pins to facilitate lubrication and protect against surface damage due to oxidization and other causes. Today, these plating solutions are comprised primarily of tin (Sn).

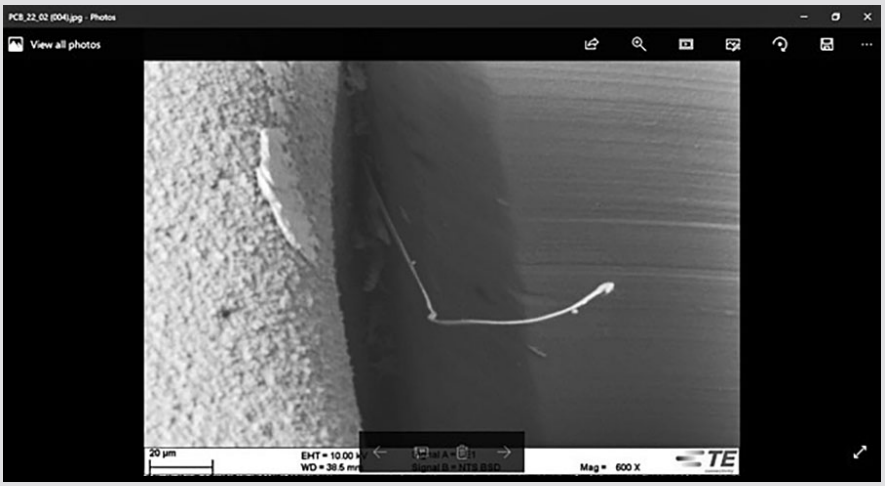

Figure 11. Tin whisker growing from a Press-Fit pin

However, tin has a high susceptibility to whisker growth. Tin whiskers can grow spontaneously from their root in hair-like formations when the tin film is stressed, such as when it is inserted into a PCB. Since tin whiskers are metal, they are electrically conductive and can grow long enough to bridge to other metal components. In extreme cases, they can short-circuit electronic operations. In the past, this problem was addressed by the inclusion of lead within plating.

Lead has been phased out of manufacturing processes because it harms the environment. Since vehicle manufacturers are reducing pin-pitch distances and adopting pin-plating solutions that primarily consist of tin, they are seeking new alternatives to reduce the risk of tin whisker formation.

INTRODUCING LITESURF PLATING – AN ENVIRONMENTALLY FRIENDLY ANTI-WHISKER PLATING FOR PRESS-FIT

TE's LITESURF plating technology is an anti-whisker plating for press-fit applications. It provides automotive electronics manufacturers with an alternative to tin that has virtually no risk of whisker growth. Based on bismuth (Bi), it is environmentally sustainable and totally harmless.

Figure 12. LITESURF anti-whisker plating composition

LITESURF plating technology is the result of more than five years of research and development to investigate a tin-free plating that relieves the risk of whisker-induced failures and is suited to the high-stress conditions of press-fit pin connections. LITESURF plating was developed to meet manufacturers' needs for progressive miniaturization, reduced pin pitch, and a smaller connector footprint on PCBs.

As TE developed the LITESURF plating technology, more than 12 different deposit compositions were researched, investigating whisker formation as well as other behavioral characteristics impacting production processes such as melting temperatures. TE experts created a detailed matrix of all options. The TE study concluded that the optimal deposit for plating was an electroplated Bismuth-based coating. Using Bismuth has additional benefits, allowing manufacturers to use an application process that follows the typical galvanic plating line procedure that is comparable to a standard tin bath. Bismuth-based LITESURF plating can be implemented within existing plating lines without any additional process changes.

Extensive LITESURF plating tests were performed on more than 5,600 multi-spring and action pins and on three different types of PCB technologies. Tests demonstrated that LITESURF plating can reduce the risk of whisker incidence by a factor of over 1,600, based on the number and size of particles detected combined with Bismuth's lower conductivity, which is 90 percent lower than tin's conductivity.

13 | WHY PARTNER WITH TE?

Co-create with us to drive connectivity innovation

Ever since the crimp was invented, TE has been partnering with automotive manufacturers to co-create leading connectivity solutions that set industry standards for innovation and performance. Today, the rapid increase of electronic content in cars and the need for miniaturized technologies are presenting new challenges that require more technologically sophisticated solutions with true automotive-grade robustness. TE continues to engage with customers early in the development process and serve as true partners in co-creating solutions that enable vehicles to be smarter and safer.

Taking a strategic approach to designing automotive space savings solutions

Automotive electronics space-saving strategies require a holistic approach. TE is able to offer connectivity solutions for terminals, connectors, headers, and press-fit technology as well as co-developed application tooling. Together, these solutions can reduce components' PCB footprint by as much as 50 percent, while interoperating seamlessly as part of a system with pre-verified interfaces. In addition, TE's miniaturized interconnection systems are designed for harsh environment applications meeting LV214 vibration requirements for vibration and IP9 levels for water resistance.

Optimizing a global end-to-end value chain

TE is able to support all aspects of product development in-house. TE is in full control of all stages of manufacturing from product design and validation; to development, including stamping, molding, plating, and assembly; and testing, quality assurance, application and customer support. This means we can offer greater flexibility with manufacturing volumes, provide high quality assurance at each stage of key processes, and guarantee faster and controlled delivery times.

Get automotive-grade, miniaturized solutions for your automotive application.

Contact TE today.

ABOUT TE CONNECTIVITY

TE Connectivity (NYSE: TEL) is a $13 billion global technology and manufacturing leader creating a safer, sustainable, productive, and connected future.

For more than 75 years, our connectivity and sensor solutions, proven in the harshest environments, have enabled advancements in transportation, industrial applications, medical technology, energy, data communications, and the home.

With 78,000 employees, including more than 7,000 engineers, working alongside customers in nearly 150 countries, TE ensures that EVERY CONNECTION COUNTS. Learn more at www.te.com and on LinkedIn, Facebook, WeChat and Twitter.

TE Connectivity Germany GmbH
Ampèrestrasse 12-14
64625 Bensheim | Germany

www.TE.com